Custom Cut Liners :: Quick Worksheet

After completing your measurements and selections, go to http://customcutliners.com/order/ to place your order!

CORK

- Natural Cork

Max Width: 24”
Max Length: 48”

PLAST-0-MAT®

- Bisque
- Clear
- Vibrant White

Max Width: 24”
Max Length: 48”

IMPORTANT!
Please note the direction of the pattern in relation to the width and length

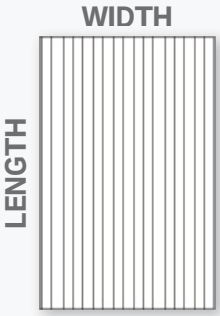

DECORATIVE CONTACT PAPER

- Fleur de Lys: Cafe
- Fleur de Lys: Natural
- Glossy: Natural
- Glossy: White

Discontinued

Max Width: 17”
Max Length: 48”

IMPORTANT!
Please note the direction of the pattern in relation to the width and length

See Instructions on Page 2

1/8 1/4 3/8 1/2 5/8 3/4 7/8

ITEM#	QTY	CORK	PLAST-O-MAT®			CONTACT PAPER				WIDTH		LENGTH		NO SAFETY CUT	NOTES
		Natural	**Bisque**	**Clear**	**White**	Fleur de Lys: **Cafe**	Fleur de Lys: **Natural**	Glossy: **Natural**	Glossy: **White**	**Whole** *(inches)*	**Fraction**	**Whole** *(inches)*	**Fraction**		*DESCRIBE LOCATION OF DRAWER OR SHELF*

Discontinued

COPYRIGHT © 2009 CUSTOMCUTLINERS.COM

SIMPLE STEPS:

1. Print this form
2. For each shelf / drawer:
   a. Measure the drawer or shelf

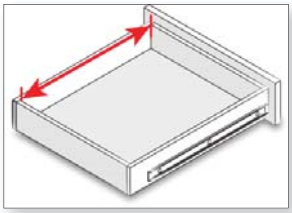
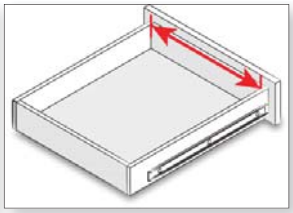
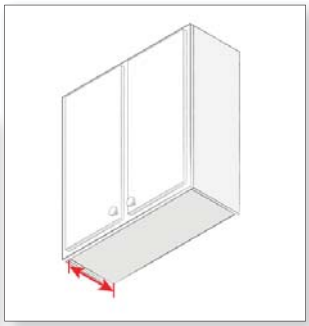
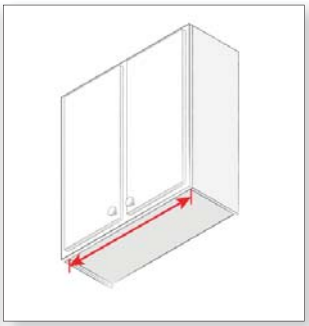

NOTE: *See http://customcutliners.com/get_started/ for specific measuring instructions*

   b. Fill-in the **quantity**
   c. Check the box for the desired **material** and **color**
   d. Fill-in the **width:** Whole number, and then the fraction if necessary
   e. Fill-in the **length**: Whole number, and then the fraction if necessary

   NOTE: *For liners with patterns, make sure that you fill-in the width and length so that the pattern is oriented to your liking. Please use the diagrams on page 1 as a guide.*

   f. Check the box for **NO SAFETY CUT** if you do not want 1/8" automatically taken off of each dimension.

   NOTE: *It is highly recommended that you do not disable the safety cut feature.*

   g. In the **notes** field, fill-in the location of the shelf or drawer

See Instructions on Page 2

c.

1/8 1/4 3/8 1/2 5/8 3/4 7/8

ITEM#	b. QTY	CORK: Natural	PLAST-O-MAT®: Bisque	PLAST-O-MAT®: Clear	PLAST-O-MAT®: White	CONTACT PAPER: Fleur de Lys: Cafe	CONTACT PAPER: Fleur de Lys: Natrual	CONTACT PAPER: Glossy: Natural	CONTACT PAPER: Glossy: White	WIDTH Whole (inches) d.	WIDTH Fraction	LENGTH Whole (inches) e.	LENGTH Fraction	NO SAFETY CUT f.	g. NOTES
	2		X							12	1/2	9	1/4		drawers to right of sink
	3	X								11	-	22	3/8		shelves over toaster
	1					X				11	3/8	12	-		junk drawer

LENGTH / WIDTH / LINER

3. When you have completed filling out the form, number the **Item#** boxes starting at the top, and moving down.

4. At http://customcutliners.com/order/ enter the items into the wizard in the same order as the worksheet. The **Item#** numbers should match (see the diagram below)

NOTE: *When you receive your liners, they will each contain a small label that references the **Item#** that was assigned in the shopping cart. This will help you to quickly determine the size and intended location (based on your notes) of each liner, so hold on to this completed form until you receive your order*

3.

ITEM#	QTY	Natural	Bisque	Clear
1	3		X	
2	3	X		
	1			
3	1	X		

4.

Item#	Quantity	Product Name	Col
1	3	Plast-O-Mat® 12-1/2" X 9-1/4"	
2	3	Cork 11" X 22-3/8"	
3	1	Cork 7-1/4" X 9-1/2"	

NOTE: *For organizational purposes, if you enter identical products (material, color, size, & safety cut) into the wizard as separate items, they will retain their individual **Item#** numbers*

COPYRIGHT © 2009 CUSTOMCUTLINERS.COM